Xnergy

MISSION & VISSION

Lead the world in innovative charging solution for mobile robots and electric vehicle

Established in 2017

2 Cleantech Loop, #04-09, Singapore 637144

info@xnergytech.com

XNERGY WIRELESS CHARGER PRODUCT

Xnergy
Autonomous Power Technology

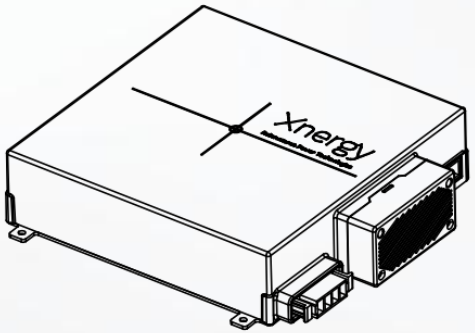

Receiver Charging Unit (RCU)

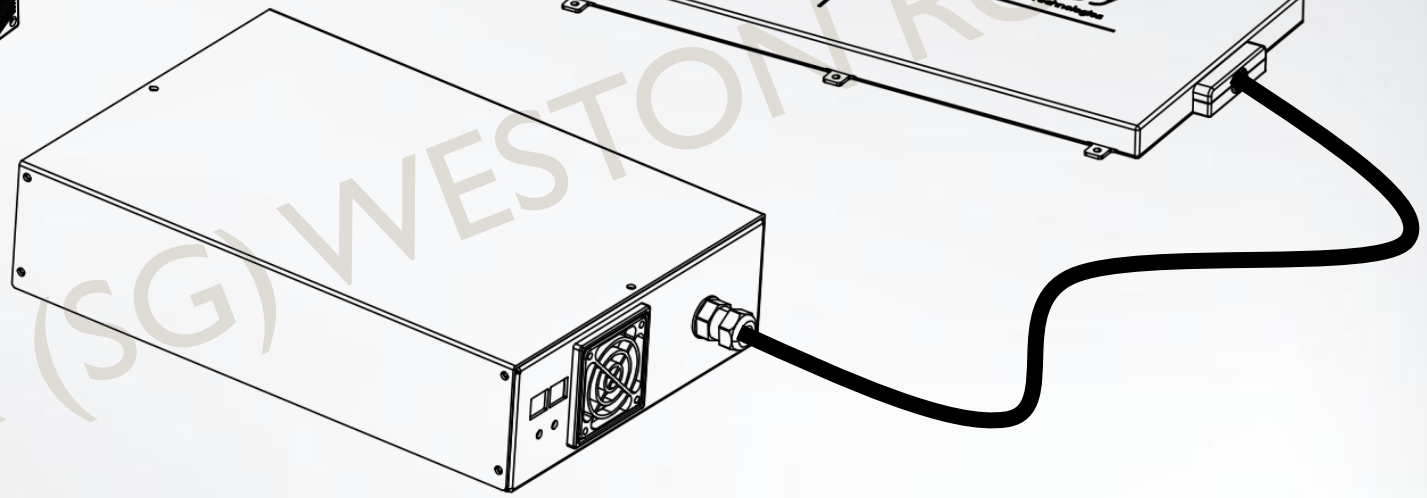

Transmitter Pad (TXP)
(BE-TXP20A)

Transmitter Powering Unit (TPU)
(BE-TPU3300-SA)

Charging Power Capability
- 24V system – 15V to 30V / max. 90A (BE-RCU3090M)
- 48V system – 15V to 60V / max. 50A (BE-RCU6050M)

Communication Protocols
- Modbus RTU (RS485)
- CAN Bus 2.0B
- GPIO (3.3V to 12V)

A Universal Transmitter Station B Receiver Charging Unit

CE RoHS

ORIGIN FOR (SG) WESTON ROBOTS

Confidential
© 2020 Xnergy Autonomous Power Technologies Pte. Ltd. All Rights Reserved.

EFFECTIVE AIR GAP CHARGING CAPABILITY

Xnergy
Autonomous Power Technology

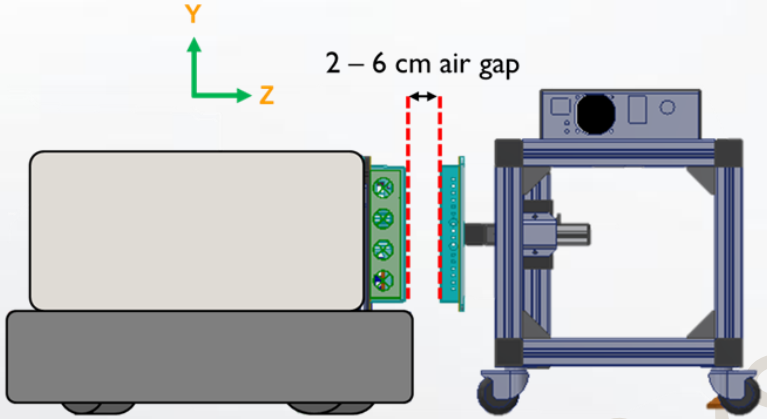

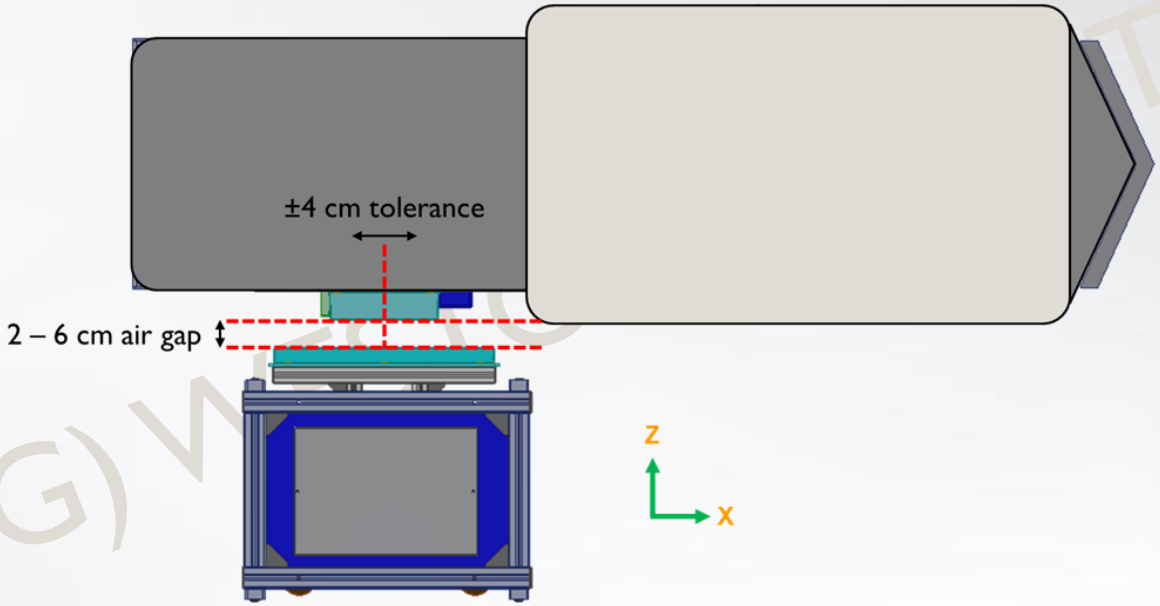

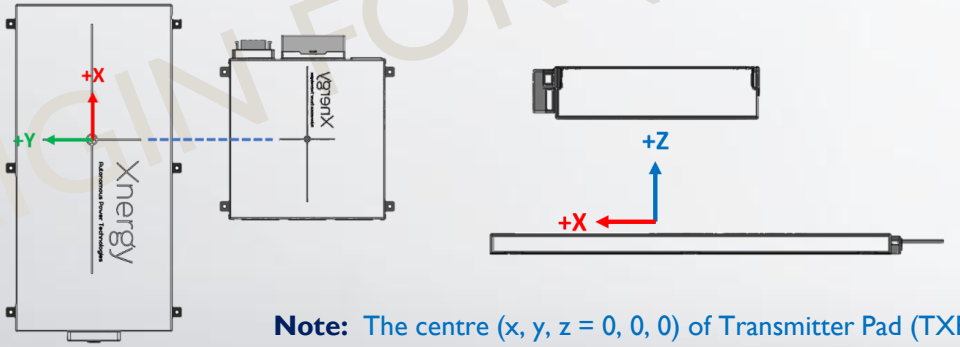

Maximum Effective Air Gap Charging Capability

X -axis = ±4 cm
Y -axis = ±1 cm
Z -axis = 2 cm to 6 cm

Note: The centre (x, y, z = 0, 0, 0) of Transmitter Pad (TXP) and Receiver Charging Unit (RCU) are referenced to the centre point of the crossing lines.

Z-axis can be up to 7cm for 24V Model (BE-RCU3090M)

ORIGIN FOR (SG) WEBINARS

Confidential
© 2020 Xnergy Autonomous Power Technologies Pte. Ltd. All Rights Reserved.

SAFE SURROUND OPERATION

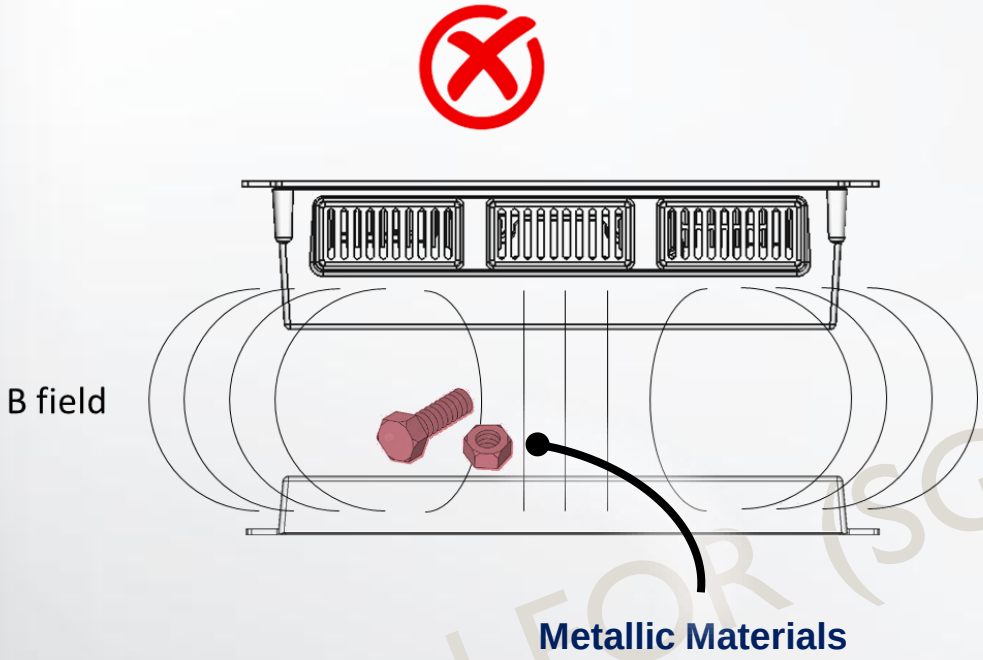

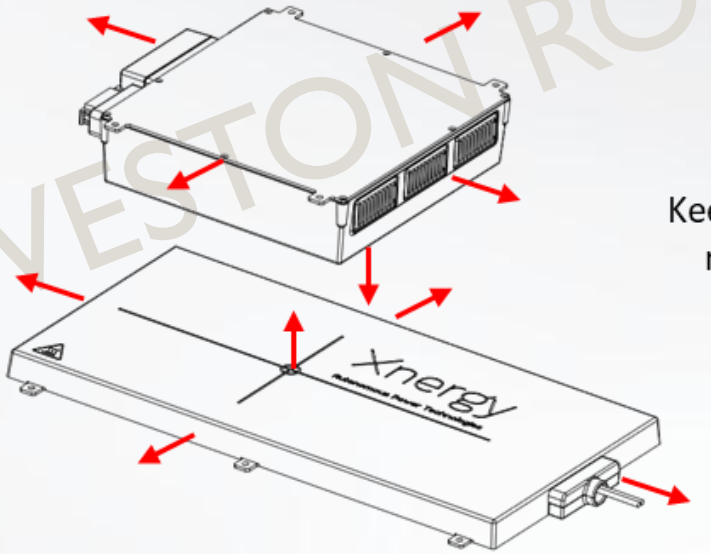

Keep clear of metallic or magnetic objects in surrounding area

Note:

✗ No metallic materials surrounding the TXP.

✗ No metallic materials like screws, nuts, bots, wires, etc in between TXP and RCU at all times.

✓ Only Plastic materials surrounding the TXP is highly advisable.

ORIGIN FOR (SG) WESTON ROBOTS

Confidential
© 2020 Xnergy Autonomous Power Technologies Pte. Ltd. All Rights Reserved.

RCU COMMUNICATION – MODBUS & GPIO

Xnergy
Autonomous Power Technology

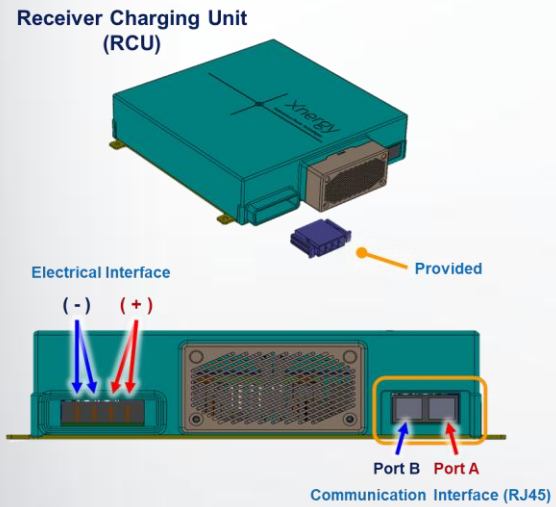

Port A Pin Configuration

Pin NO.	Name	Remark
1	RS485A	Modbus RTU 485
2	RS485B	Modbus RTU 485
3	CANH	CAN Bus
4	CANL	CAN Bus
5	NC	
6	Reserved	Xnergy use only
7	Reserved	Xnergy use only
8	GND	

Communication Parameters

Protocol	Modbus RTU(RS485)
Baud rate	9600
Data bits	8
Parity bit	None
Stop bit	1
Unit ID	0x10

Port B Pin Configuration

Pin NO.	Name	Remark
1	CHARGER_EN	Charger enable / disable (pull up to 5 V internally) Set it LOW (or connect to GND) to enable wireless charging and HIGH (or leave it NC) to disable wireless charging.
2	CHARGER_ST	Normally in HIGH (at CHARGER_SC voltage level) and will give a LOW (at GND voltage level) pulse after charging completed. For driving external device such as Relay, SSR, etc, connect CHARGER_SC (+) and CHARGER_ST (-). For 5V signal connect CHARGER_ST (+) and GND (-).
3	CANH	CAN Bus
4	CANL	CAN Bus
5	CHARGER_SC	Voltage supply for CHARGER_ST.
6	Reserved	Xnergy use only
7	Reserved	Xnergy use only
8	GND	RCU Ground

Communication Port

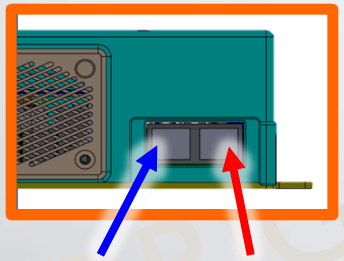

Port B Port A

Communication Parameters Address

Function	Data type	Access	Modbus Type	Modbus Address	More Detail
Start/Stop Charging	Bool	Read/Write	coil	0	1: start charging 0: stop charging
Firmware Version Number Low	Uint16	Read Only	Input register	98	
Firmware Version Number High	Uint16	Read Only	Input register	99	

More Information will be shared during Session III on communication between Robot and RCU.

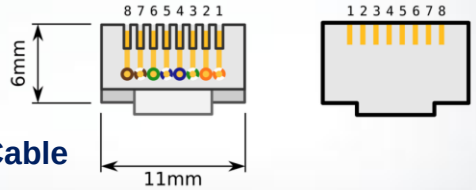

RJ45 Cable

RJ45 Plug (Male)

RJ45 Jack (Female)

Note:

- **Port A** is for **MODBUS RTU 485** and **CAN BUS** communication
- **Port B** is for **GPIO** and **CAN BUS** communication

© 2020 Xnergy Autonomous Power Technologies Pte. Ltd. All Rights Reserved.

RCU COMMUNICATION – CAN BUS (REQUEST)

Xnergy
Autonomous Power Technology

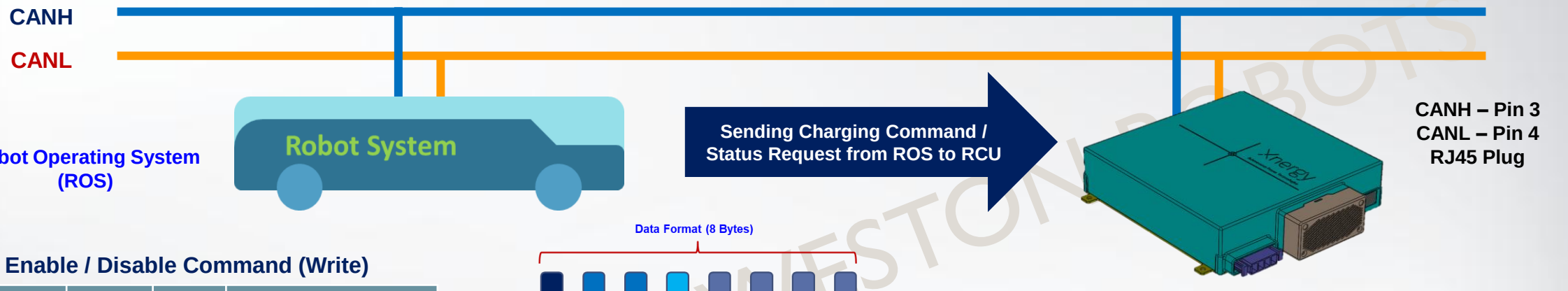

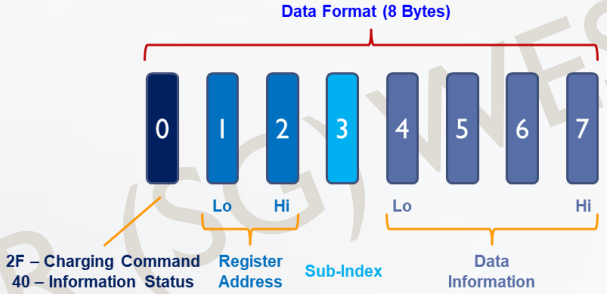

Charging Enable / Disable Command (Write)

	ID	Len	Data Message
Enable Charging	0x60A	8	2F 00 20 01 01 00 00 00
Disable Charging	0x60A	8	2F 00 20 01 00 00 00 00

Information Status (Write)

	ID	Len	Data Message
Charging Status	0x60A	8	40 00 20 01 00 00 00 00
Shadow Error Low	0x60A	8	40 02 20 01 00 00 00 00
Shadow Error High	0x60A	8	40 02 20 02 00 00 00 00
Runtime Error Low	0x60A	8	40 02 20 03 00 00 00 00
Runtime Error High	0x60A	8	40 02 20 04 00 00 00 00
Battery Voltage	0x60A	8	40 02 20 06 00 00 00 00
Charging Current	0x60A	8	40 02 20 07 00 00 00 00

Sending Charging Command or Requesting Status Information

- Send data message with ID always **0x60A**
- **Byte 0** – Charging Command (2F) or Information Status (40)
- **Byte 1 / 2** – Register Address (Lo / Hi)
- **Byte 3** – Sub-Index
- **Byte 4 to 7** – Always 00 00 00 00

Note:

- **Port A** and **Port B** supports **CAN BUS** communication.
- RCU will respond back to ROS a message only after sending a charging command or status request to 0x60A (ID) and the data message format given. Please refer to next slide for respond message send from RCU.
- Action commands to “Enable” or “Disable” Xnergy wireless charging operation can be sent repeatedly.

OR (SG) WESTON ROBOTS

© 2020 Xnergy Autonomous Power Technologies Pte. Ltd. All Rights Reserved.

RCU COMMUNICATION – CAN BUS (RESPOND)

Xnergy
Autonomous Power Technology

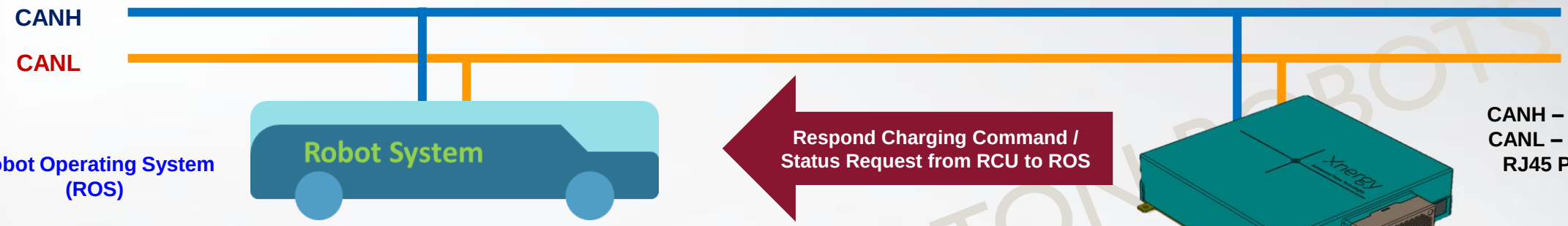

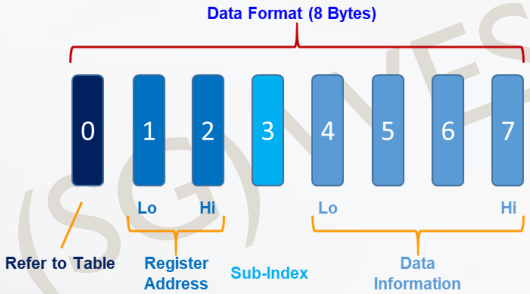

Xnergy Receiver Charging Unit (RCU)

Charging Enable / Disable Command (Read)

	ID	Len	Data Message
Enable Charging	0x58A	8	60 00 20 01 xx xx xx xx
Disable Charging	0x58A	8	60 00 20 01 xx xx xx xx

Information Status (Read)

	ID	Len	Data Message	Data Conversion
Charging Status	0x58A	8	4F 00 20 01 xx xx xx xx	Byte 4 – 01 (**ON**) 00 (**OFF**)
Shadow Error Low	0x58A	8	4B 02 20 01 xx xx xx xx	(Byte 5 | Byte 4) Hex
Shadow Error High	0x58A	8	4B 02 20 02 xx xx xx xx	(Byte 5 | Byte 4) Hex
Runtime Error Low	0x58A	8	4B 02 20 03 xx xx xx xx	(Byte 5 | Byte 4) Hex
Runtime Error High	0x58A	8	4B 02 20 04 xx xx xx xx	(Byte 5 | Byte 4) Hex
Battery Voltage	0x58A	8	4B 02 20 06 xx xx xx xx	(Byte Hi to Byte Lo) Hex to Dec × **0.01155**
Charging Current	0x58A	8	4B 02 20 07 xx xx xx xx	(Byte Hi to Byte Lo) Hex to Dec × **0.04028**

Receiving Respond from RCU

- Read data message with ID always **0x58A**
- **Byte 0** – Please be specific and refer to the Table provided.
- **Byte 1 / 2** – Register Address (Lo / Hi)
- **Byte 3** – Sub-Index
- **Byte 4 to 7** – Follow Data Conversion in the Table provided

Note:

- **Port A** and **Port B** supports **CAN BUS** communication.
- To receive Information Status, Byte 0 must be specified.

© 2020 Xnergy Autonomous Power Technologies Pte. Ltd. All Rights Reserved.

CAN BUS - MONITOR RCU ERROR STATUS

Xnergy
Autonomous Power Technology

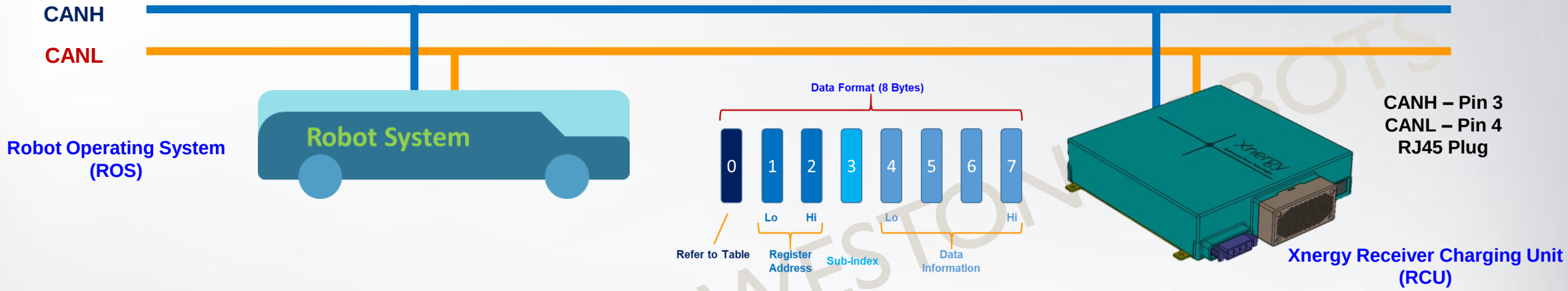

Sending Charging Command / Status Request from ROS to RCU

Respond Charging Command / Status Request from RCU to ROS

State Status (Write)

	ID	Len	Data Message
Main State	0x60A	8	40 02 20 0A 00 00 00 00
Previous State	0x60A	8	40 02 20 09 00 00 00 00

State Status (Read)

	ID	Len	Data Message	Data Conversion
Main State	0x58A	8	4B 02 20 0A xx xx xx xx	Byte 4 – Hex to Dec
Previous State	0x58A	8	4B 02 20 09 xx xx xx xx	Byte 4 – Hex to Dec

Code	Status
0	**RCU_IDLE**
1	RCU_RESERVE_0
2	RCU_HANDSHAKE_0
3	RCU_HANDSHAKE_1
4	RCU_HANDSHAKE_2
5	**RCU_CHARGING**
6	**RCU_STOP**
7	RCU_RESERVE_1
238	**RCU_ERROR**
240	RCU_RESERVE_2
250	RCU_NOT_CONNECTED

© 2020 Xnergy Autonomous Power Technologies Pte. Ltd. All Rights Reserved.

CAN BUS - MONITOR RCU ERROR STATUS

Xnergy
Autonomous Power Technology

State	Conditions
0	**RCU Idle / Standby**
1	RCU Reserve 0
2	RCU Handshake 0
3	RCU Handshake 1
4	RCU Handshake 2
5	**RCU Start Charging**
6	**RCU Stop Charging**
7	RCU Reserve 1
8	RCU Reserve 2
9	RCU Reserve 3
238	**RCU Error**
240	**RCU Reserve Mode**
250	**RCU Not Connected**

Important Status

Code 0: RCU is in Idle (Standby Mode).

Code 5: RCU is successfully in Wireless Charging Operation.

When Robot sends "enable" charging command, RCU will go into State 1, 2, 3, 4 and then 5. States 1 to 3 are handshake processes.

When Robot sends "disable" charging command, RCU will go into State 6, 7 then back to 0 for Idle (Standby Mode).

Code 238: RCU encounters error.

For non-critical errors, RCU at Main State = 238 will soft-reset (self-reboot) and goes to Main State = 0 (**Previous State = 238**), Robot may read **Shadow Error Hi and Lo.**

For critical errors, RCU stays at **Main State = 238**, Robot may read **Runtime Error Hi and Lo**.

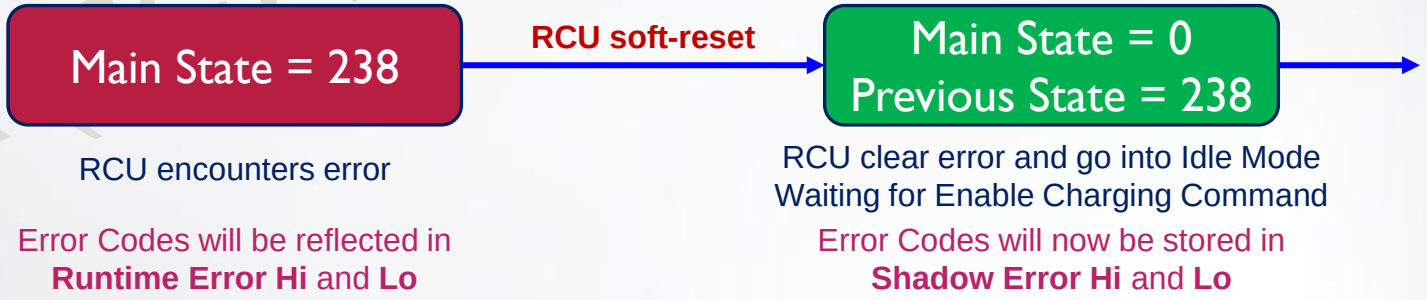

Code 250: No connection or no communication between Robot to RCU.

Check if RCU has any LED and if communication cables are ok.

Note: Contact Xnergy if encounter Code 240 or Code 238 if RCU status remains unchanged for a long period of time (> 1 minute).

FOR (C) WESTON ROBOTS

© 2020 Xnergy Autonomous Power Technologies Pte. Ltd. All Rights Reserved.

WIRELESS CHARGING LED STATUS

Xnergy
Autonomous Power Technology

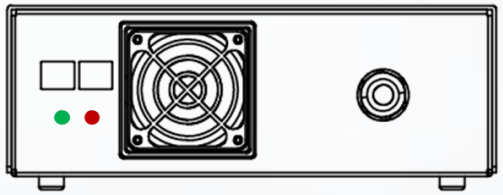

Transmitter Powering Unit (TPU)

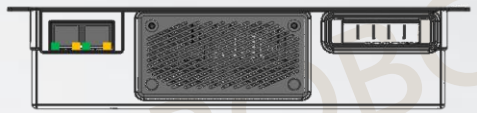

Receiver Charging Unit (RCU)

No	Green LED	Red LED	Device State
1	OFF	SLOW BLINK	IDLE, waiting for RX to initiate charging process.
2	FAST BLINK	FAST BLINK	Critical error state. Intervention is needed. Please contact Xnergy customer service.
3	ON	SLOW BLINK	Handshake, exchange information between TPU and RCU.
4	SLOW BLINK	ON	Physical presence check for safety.
5	OFF	ON	Charging in operation.
6	SLOW BLINK	SLOW BLINK	Error state.
7	FAST BLINK	ON	In Debug mode. Please contact Xnergy customer service.

No	Green LED	Yellow LED	Device State
1	SLOW BLINK	OFF	Ready (Idle, Normal/Debug Mode)
2	OFF	FAST BLINK	Discovery (looking for primary side, Normal/Debug Mode)
3	ON	OFF	Run (Charging, Normal Mode)
4	ON	SLOW BLINK	Pre-Run (Measure alignment, Normal Mode)
5	OFF	OFF	Stop (Stop charging, Normal Mode)
6	FAST BLINK	FAST BLINK	Error (Something went wrong)

Note for TPU:

- SLOW BLINK (500ms)
- FAST BLINK (200ms)

Note for RCU:

- SLOW BLINK (500ms)
- FAST BLINK (100ms)

Please contact Xnergy if you encounter any other distinct LED status.

XNERGY WIRELESS CHARGING PROCESS

Xnergy
Autonomous Power Technology

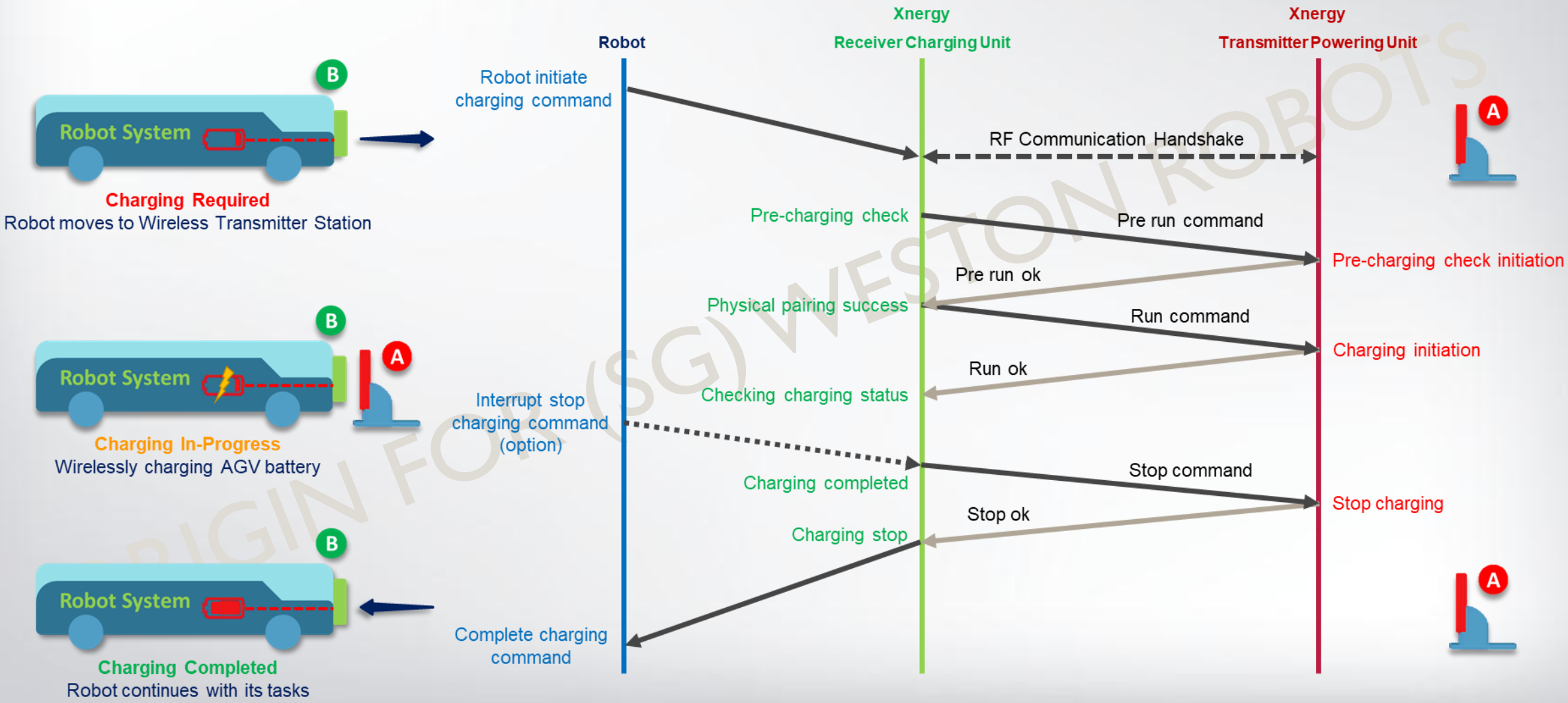

ORIGIN FOR (SG) WESTON ROBOTS

© 2020 Xnergy Autonomous Power Technologies Pte. Ltd. All Rights Reserved.

BATTERY CHARGING PROFILE

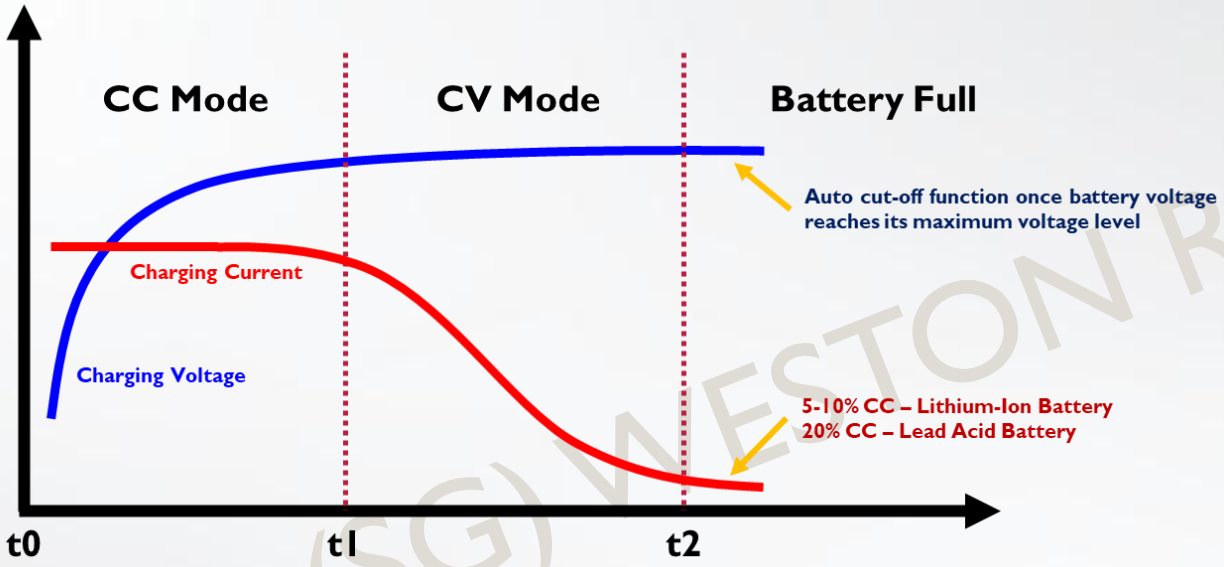

Xnergy Charging Capability

- Xnergy RCU is always **easy to reconfigure** for different battery types, voltage and current ratings.
- Constant Current (CC) / Constant Voltage (CV) is typical common charging profile used.

  Receiver charging unit (RCU) will charge the battery with the maximum charging current set during CC mode. When the battery voltage increases to near to its battery full voltage set, the charging current will decrease accordingly to be as low as required during the CV mode. In all cases, the RCU will deliver output charging current to its minimum to maintain the battery voltage at its full battery voltage values which is the float charge.
- Xnergy charger has auto cut-off function to **protect battery** – electrical power is cut off once battery voltage reaches its maximum voltage level set.
- Xnergy charger can provide float charging as well for Lead Acid battery type or customized charging profile.

ORIGIN FOR (SG) WESTON ROBOTS

SAFETY OPERATION PROCEDURES

Xnergy
Autonomous Power Technology

DO's

- ✓ Ensure the battery in the Robot has sufficient energy.
- ✓ Ensure Xnergy Receiver Charging Unit (RCU) output + and - terminal are connected appropriately. The LED will light up then enclose the output terminals after that.
- ✓ Ensure there is command / signal from the robot via RJ45 and connect to the correct Port A or B.
- ✓ Ensure all settings (voltage, current, power, charging profile) are correctly set. Inform Xnergy otherwise.
- ✓ Ensure RCU on the Robot can dock within the given charging alignment tolerance area.
- ✓ Ensure the surrounding of the transmitter station are safe to operate.
- ✓ Ensure the AC inlet power cord is connected to Xnergy Transmitter Powering Unit (TPU) before turning on the TPU.

DONT's

- × Do not place metallic materials within 10 cm surrounding the wireless charging area. Any of the metallic materials found near the wireless charging area may heat up to 200 °C. Any materials near must be fully plastic only.
- × Please inform pacemakers to stay at least 2m away during wireless charging operation.
- × Do not disconnect RCU from the battery during operation at all times.
- × Do not shift or move robot during operation.
- × Do not stop the operation abruptly. Ensure the wireless charging process is stop appropriately. In any event of emergency, power off the Xnergy TPU.

ORIGIN FOR (SG) WESTON ROBOTS

XNERGY DEVICE MONITOR - RCU

Xnergy
Autonomous Power Technology

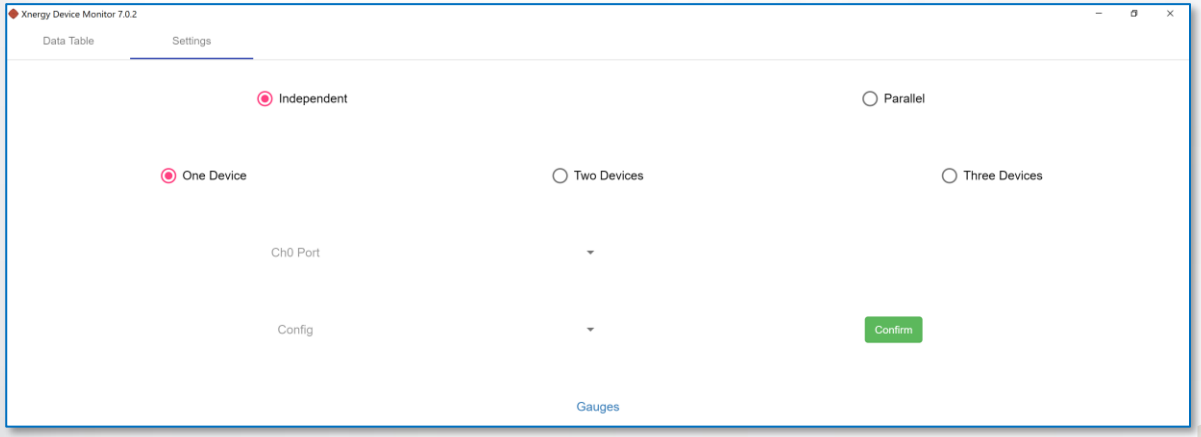

Xnergy Device Monitor 7.0.2

Sec_User | Settings

Label	Ch0	Type	Label	Ch0	Type
FIRMWARE_REV_LO	0x0000	uint	RX_shadow_error_hi	0x0000	uint
FIRMWARE_REV_HI	0x0000	uint	enable_charger	0	bool
Battery Voltage	0	uint	runtime_voltage_setting_Q128	0	uint
Output Current	0	uint	runtime_current_setting_Q128	0	uint
Charger_temperature	0	uint	FORCE_MODE	0	uint
RX_error_code_lo	0x0000	uint	FORCE_MODE_PASSWORD_LO	0x0000	uint
RX_error_code_hi	0x0000	uint	FORCE_MODE_PASSWORD_HI	0x0000	uint
RX_shadow_error_lo	0x0000	uint		0x0000	uint

Xnergy Device Monitor (Receiver Charging Unit) – Sec_User

Xnergy Device Monitor – For Monitoring Purpose

1) Go to **Settings**
2) Select **Independent** and **One Device**
3) Find out the **Com Port number** in Device Manager and select accordingly in XDM.
4) Select **Sec_User** and click **Confirm**.
5) Go to Sec_User on the top left hand tab and click.
6) Information will be displayed:
   - Battery Voltage (Values ÷ 128)
   - Output Current (Values ÷ 128)
   - Charger Temperature (°C)
   - RX_error_code_hi / lo (Hex) – Realtime error before RCU reboots
   - RX_shadow_error_hi / lo (Hex) – Stored previous error after RCU reboots
7) Parameters to control:
   - Enable_charger = 1 (Start) / 0 (Stop) only for Modbus RTU RS485
     (Not applicable when activated GPIO and CAN Bus control)
   - Runtime_voltage_setting_Q128 = (Voltage × 128) for CV values
     (Once stop wireless charging operation, values will revert back to the saved settings)
   - Runtime_current_setting_Q128 = (Current × 128) for CC values
     (Once stop wireless charging operation, values will revert back to the saved settings)

WESTON ROBOTS

Confidential
© 2020 Xnergy Autonomous Power Technologies Pte. Ltd. All Rights Reserved.

RCU COMMUNICATION SETTINGS

Xnergy
Autonomous Power Technology

Xnergy Device Monitor 7.0.2

sec_user_config | Settings

Label	Ch0	Type	Label	Ch0	Type
FIRMWARE_REV_LO	*0x0000*	*uint*	CANopen_enable	0	bool
FIRMWARE_REV_HI	*0x0000*	*uint*	CAN_PROTOCOL_SELECT	0	uint
runtime_voltage_setting_Q128	0	uint	IO_control_enable	0	bool
runtime_current_setting_Q128	0	uint	Auto_charging_enable	0	bool
voltage_setting_Q128	0	uint	RCU_HEIGHT_IN_MM	0	uint
current_setting_Q128	0	uint	rewrite_cfg_flash	0	bool
cutting_off_voltage_Q128	0	uint	FORCE_MODE	0	uint
cutting_off_CV_current_Q128	0	uint	FORCE_MODE_PASSWORD_LO	0x0000	uint
CAN_bit_rate_KBPS	0	uint	FORCE_MODE_PASSWORD_HI	0x0000	uint

Xnergy Device Monitor (Receiver Charging Unit) – Sec_User_Config

Xnergy Device Monitor – For Battery Charging & Communication Settings

1) Go to **Settings**
2) Select **Sec_User_Config** and click **Confirm**.
3) Go to Sec_User_Config on the top left hand tab and click.
4) Set **Force_Mode_Password** = **DCBA (Lo)** and **ABCD (Hi)**
5) Change **Force_Mode** = **4**
6) **Battery Charging Profile Settings**:

- Voltage_setting_Q128 (Values × 128) – CV values
- Current _setting_Q128 (Values × 128) – CC values
- Cutting_off_voltage_Q128 (Values × 128)
  - ➢ If cutting_off_voltage_Q128 > voltage_setting_Q128 – Settings for Battery voltage protection。
  - ➢ If cutting_off_voltage_Q128 < voltage_setting_Q128 – if only CC stage charging profile is required.
- Cutting_off_CV_current_Q128 (Values × 128) –
  - ➢ If cutting_off_CV_current_Q128 = 0 – float (trickle) charging
  - ➢ If cutting_off_CV_current_Q128 > 0 – cut off charging once current falls below

7) **Communication Protocols Settings**:

- IO_control_enable = 1 for GPIO
- CANopen_enable = 1 for CAN Bus
  - CAN_bit_rate_KBPS for CAN Bus bit rate
  - CAN_Protocol_Select for others customized communications

8) Save settings with **Rewrite_cfg_flash** = **1**, **after**
9) Ensure and change **Force_Mode** = **3** for normal operation

Disclaimer Notes:
Engineers setting Battery Charging Profile must have sufficient knowledge and understanding from the Battery Datasheet and BMS protection functions if there are. Always ensure that the values keyed are within the limits of the products. Xnergy shall not be held responsible for the wrong input values set. Please contact Xnergy if you have any other enquires.

ORIGIN FOR (S... NESTON ROBOTS

Confidential
© 2020 Xnergy Autonomous Power Technologies Pte. Ltd. All Rights Reserved.

Xnergy

Autonomous Power Technologies

Xnergy Autonomous Power Technologies Pte. Ltd.
JTC Launchpad @ Jurong Innovation District
2 Clean Tech Loop, #04-09, Singapore 637144
www.xnergytech.com

ORIGIN FOR (SG) WESTON ROBOTS

Confidentiality Notice: This document is confidential and contains proprietary information and intellectual property of Xnergy Autonomous Power Technologies Pte Ltd. Neither this document nor any of the information contained herein may be reproduced or disclosed under any circumstances without the express written permission of Xnergy. Please be aware that disclosure, copying, distribution or use of this document and the information contained therein is strictly prohibited.

© 2020 Xnergy Autonomous Power Technologies Pte. Ltd. All Rights Reserved.